High-Cycle Fatigue of a Reciprocating Piston Engine

This model is licensed under the COMSOL Software License Agreement 6.1.
All trademarks are the property of their respective owners. See www.comsol.com/trademarks.

Introduction

In a reciprocating piston engine, the connecting rods transfer rotating motion into reciprocating motion. The connecting rods are constantly subjected to high stresses and the load increases with the engine speed. A failure of one part in the engine usually results in a replacement of the whole engine. It is therefore of crucial importance to design all engine parts so that none of them fail during the operational lifetime. The connecting rods are identified as critical parts and are here analyzed from the fatigue perspective. The fatigue lifetime is predicted using the Basquin high-cycle fatigue criterion.

This example is based on a model in the Multibody Dynamics Module Application Library, *Three-Cylinder Reciprocating Engine*, where one connecting rod is modeled as a flexible body while the remaining parts are modeled as rigid bodies. The connections between the different parts are obtained by using a different type of joints. This technique significantly reduces the model size while maintaining the force equilibrium in the assembly.

Model Definition

The three-cylinder engine is presented in Figure 1, and it operates at 1000 RPM. Its material data is taken from structural steel. Additional information regarding its set up can be found in the documentation for *Three-Cylinder Reciprocating Engine*.

The material data from fatigue tests is summarized in Figure 2. A Basquin relation with the material constants $\sigma_f' = 1043$ MPa and $b = -0.116$ gives a good fit to the experimental results. The material exhibits a fatigue limit at 210 MPa.

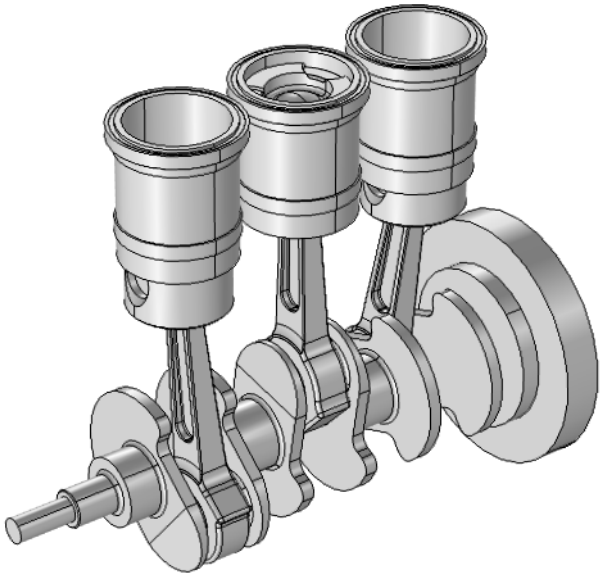

Figure 1: Geometry of the reciprocating piston engine.

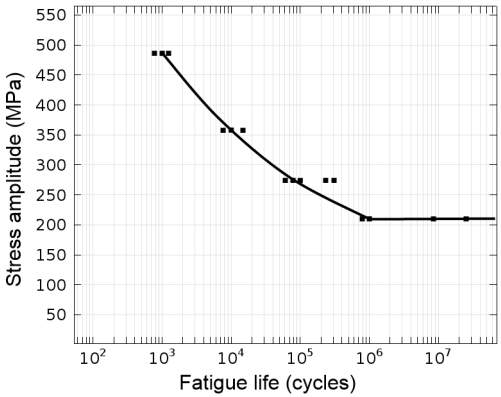

Figure 2: Fatigue material curve.

Results and Discussion

At first, stresses in a fillet of the piston end of the connecting rod are examined, see Figure 3. A fillet is chosen since a stress concentration due to geometrical change is expected there. A few revolutions must be computed before a steady state behavior is obtained. From cycle three, the stress history for each consecutive cycles seems to repeat itself. Both the peak stress and the of the stress cycle in general is about the same. The stress history is dominated by the third principal stress since the connecting rod is in compression. The two other principal stresses are small so that the stress state at the fillet can be considered uniaxial. Therefore the third principal stress is taken as the amplitude stress in the Basquin relation as opposed to the von Mises stress which may be more appropriate in a multiaxial loading. The fatigue life prediction is shown in Figure 4.

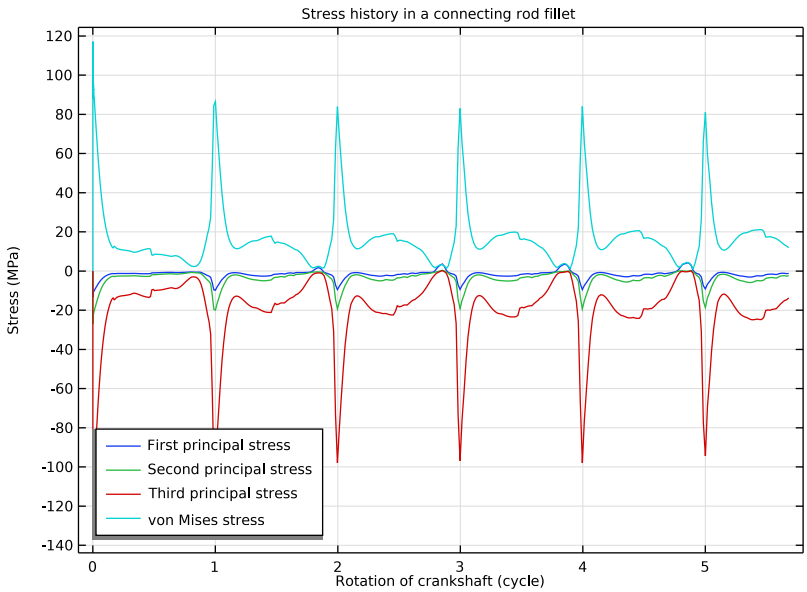

Figure 3: Stress history in the connecting rod.

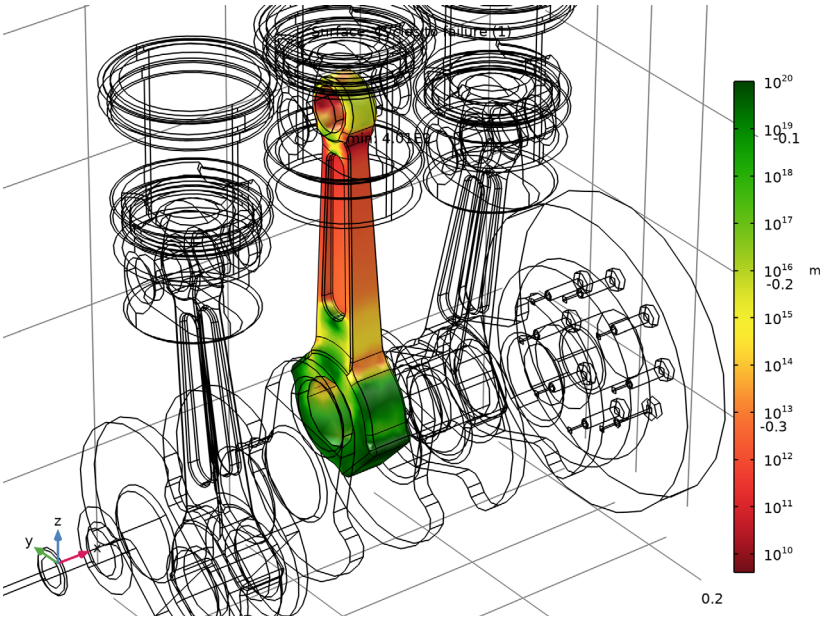

Figure 4: Fatigue life prediction in the connecting rod.

The critical point is at the fillet close to the top end of the connecting rod where the Basquin model predicts a fatigue life which is longer than ten billion ($4 \cdot 10^9$) cycles. This is an extremely long life. It can therefore be expected that the stress in the assembly is below the endurance limit that for the used material is 210 MPa. By using the Basquin relation

$$\sigma_a = 1.043 \cdot 10^9 (2N)^{-0.116}$$

where σ_a is the stress amplitude and N is the number of cycles to failure, the fatigue endurance limit life can be back-calculated to 62 million cycles. This is less than the calculated value, see Figure 4, and therefore the connecting rod is designed for infinite life. This could have been already observed in Figure 3 where the stress history is shown. Since the principal stress range is about 110 MPa the stress amplitude is about 55 MPa and that is below the endurance limit of the material.

Notes About the COMSOL Implementation

In the Basquin evaluation the parameter `Cycle cutoff` can be used to incorporate the effect of endurance limit. The number of cycles that gives the endurance limit must then be back-calculated.

Application Library path: `Fatigue_Module/Stress_Life/engine_fatigue`

Modeling Instructions

ROOT

In this example you will start from an existing model from the Multibody Dynamics Module.

APPLICATION LIBRARIES

1 From the **File** menu, choose **Application Libraries**.

2 In the **Application Libraries** window, select **Multibody Dynamics Module> Automotive and Aerospace>reciprocating_engine** in the tree.

3 Click **Open**.

If the model was stored without solutions, you will now have to run the two existing studies before continuing. To run the **Study: Thermodynamic analysis**, you need to enable the **Pressure Work** node by right clicking on **Component 1 > Heat Transfer in Fluids > Fluid 1 > Pressure Work 1** and then clicking **Enable**. This may require extra license.

Evaluate how stresses develop. Examine one point in a fillet close to the small end of the connecting rod.

RESULTS

Stress history: Connecting rod

1 In the **Home** toolbar, click **Add Plot Group** and choose **1D Plot Group**.

2 In the **Settings** window for **1D Plot Group**, type `Stress history: Connecting rod` in the **Label** text field.

3 Locate the **Data** section. From the **Dataset** list, choose **Study: Multibody Analysis/ Solution 2 (3) (sol2)**.

Point Graph 1

1 Right-click **Stress history: Connecting rod** and choose **Point Graph**.

2 In the **Settings** window for **Point Graph**, locate the **Selection** section.

3 Click **Paste Selection**.

4 In the **Paste Selection** dialog box, type `834` in the **Selection** text field.

5 Click **OK**.

6 In the **Settings** window for **Point Graph**, locate the **y-Axis Data** section.

7 In the **Expression** text field, type `mbd.sp1`.

8 From the **Unit** list, choose **MPa**.

9 Locate the **x-Axis Data** section. From the **Parameter** list, choose **Expression**.

10 In the **Expression** text field, type `theta/(2*pi)`.

11 Click to expand the **Legends** section. Select the **Show legends** check box.

12 From the **Legends** list, choose **Manual**.

13 In the table, enter the following settings:

Legends
`First principal stress`

14 In the **Stress history: Connecting rod** toolbar, click **Plot**.

Point Graph 2

1 Right-click **Point Graph 1** and choose **Duplicate**.

2 In the **Settings** window for **Point Graph**, locate the **y-Axis Data** section.

3 In the **Expression** text field, type `mbd.sp2`.

4 Locate the **Legends** section. In the table, enter the following settings:

Legends
`Second principal stress`

5 In the **Stress history: Connecting rod** toolbar, click **Plot**.

Point Graph 3

1 Right-click **Point Graph 2** and choose **Duplicate**.

2 In the **Settings** window for **Point Graph**, locate the **y-Axis Data** section.

3 In the **Expression** text field, type `mbd.sp3`.

4 Locate the **Legends** section. In the table, enter the following settings:

Legends
`Third principal stress`

5 In the **Stress history: Connecting rod** toolbar, click **Plot**.

Point Graph 4

1 Right-click **Point Graph 3** and choose **Duplicate**.

2 In the **Settings** window for **Point Graph**, locate the **y-Axis Data** section.

3 In the **Expression** text field, type `mbd.mises`.

4 Locate the **Legends** section. In the table, enter the following settings:

Legends
`von Mises stress`

5 In the **Stress history: Connecting rod** toolbar, click **Plot**.

Stress history: Connecting rod

1 In the **Model Builder** window, click **Stress history: Connecting rod**.

2 In the **Settings** window for **1D Plot Group**, locate the **Plot Settings** section.

3 Select the **x-axis label** check box. In the associated text field, type `Rotation of crankshaft (cycle)`.

4 Select the **y-axis label** check box. In the associated text field, type `Stress (MPa)`.

5 Click to expand the **Title** section. From the **Title type** list, choose **Manual**.

6 In the **Title** text area, type `Stress history in a connecting rod fillet`.

7 Locate the **Legend** section. From the **Position** list, choose **Lower left**.

8 In the **Stress history: Connecting rod** toolbar, click **Plot**.

ADD PHYSICS

1 In the **Home** toolbar, click **Add Physics** to open the **Add Physics** window.

2 Go to the **Add Physics** window.

3 In the tree, select **Structural Mechanics>Fatigue (ftg)**.

4 Find the **Physics interfaces in study** subsection. In the table, clear the **Solve** check boxes for **Study: Thermodynamic Analysis** and **Study: Multibody Analysis**.

5 Click **Add to Multibody Analysis** in the window toolbar.

6 In the **Home** toolbar, click **Add Physics** to close the **Add Physics** window.

FATIGUE (FTG)

Stress-Life 1

1 Right-click **Multibody Analysis (comp2)>Fatigue (ftg)** and choose the boundary evaluation **Stress-Life**.

Select boundaries of the connecting rod in the middle. It is easier to do using a boundary selection from domain.

DEFINITIONS (COMP2)

Middle Rod Boundaries

1 In the **Model Builder** window, expand the **Multibody Analysis (comp2)>Definitions** node.

2 Right-click **Multibody Analysis (comp2)>Definitions** and choose **Selections>Explicit**.

3 In the **Settings** window for **Explicit**, type `Middle Rod Boundaries` in the **Label** text field.

4 Select Domain 6 only.

5 Locate the **Output Entities** section. From the **Output entities** list, choose **Adjacent boundaries**.

FATIGUE (FTG)

Stress-Life 1

1 In the **Model Builder** window, under **Multibody Analysis (comp2)>Fatigue (ftg)** click **Stress-Life 1**.

2 In the **Settings** window for **Stress-Life**, locate the **Boundary Selection** section.

3 From the **Selection** list, choose **Middle Rod Boundaries**.

4 Locate the **Fatigue Model Selection** section. From the **Criterion** list, choose **Basquin**.

5 Locate the **Solution Field** section. From the **Physics interface** list, choose **Multibody Dynamics (mbd)**.

6 Locate the **Fatigue Model Parameters** section. From the σ_f' list, choose **User defined**. In the associated text field, type `1.043e9`.

7 From the b list, choose **User defined**. In the associated text field, type `-0.116`.

The cutoff value can be used to specify the endurance limit. In this example the cutoff is set to a high value in order to examine how the Basquin model predicts lifetime in case the material did not have an endurance limit.

8 Locate the **Evaluation Settings** section. In the N_{cut} text field, type `1e20`.

ADD STUDY

1 In the **Home** toolbar, click **Add Study** to open the **Add Study** window.

2 Go to the **Add Study** window.

3 Find the **Studies** subsection. In the **Select Study** tree, select **Preset Studies for Selected Physics Interfaces>Fatigue>Fatigue**.

4 Click **Add Study** in the window toolbar.

5 In the **Home** toolbar, click **Add Study** to close the **Add Study** window.

STUDY 3

Step 1: Fatigue

1 In the **Settings** window for **Fatigue**, locate the **Study Settings** section.

2 Select the **Include geometric nonlinearity** check box.

3 Locate the **Values of Dependent Variables** section. Find the **Values of variables not solved for** subsection. From the **Settings** list, choose **User controlled**.

4 From the **Method** list, choose **Solution**.

5 From the **Study** list, choose **Study: Multibody Analysis, Time Dependent**.

6 From the **Time (s)** list, choose **From list**.

7 In the **Time (s)** list, choose **0.1368 s**, **0.1372 s**, **0.1376 s**, **0.138 s**, **0.1384 s**, **0.1388 s**, **0.1392 s**, **0.1396 s**, **0.14 s**, **0.1404 s**, **0.1408 s**, **0.1412 s**, **0.1416 s**, **0.142 s**, **0.1424 s**, **0.1428 s**, **0.1432 s**, **0.1436 s**, **0.144 s**, **0.1444 s**, **0.1448 s**, **0.1452 s**, **0.1456 s**, **0.146 s**, **0.1464 s**, **0.1468 s**, **0.1472 s**, **0.1476 s**, **0.148 s**, **0.1484 s**, **0.1488 s**, **0.1492 s**, **0.1496 s**, **0.15 s**, **0.1504 s**, **0.1508 s**, **0.1512 s**, **0.1516 s**, **0.152 s**, **0.1524 s**, **0.1528 s**, **0.1532 s**, **0.1536 s**, **0.154 s**, **0.1544 s**, **0.1548 s**, **0.1552 s**, **0.1556 s**, **0.156 s**, **0.1564 s**, **0.1568 s**, **0.1572 s**, **0.1576 s**, **0.158 s**, **0.1584 s**, **0.1588 s**, **0.1592 s**, **0.1596 s**, and **0.16 s**.

8 In the **Model Builder** window, click **Study 3**.

9 In the **Settings** window for **Study**, type `Study: Fatigue analysis` in the **Label** text field.

10 In the **Home** toolbar, click **Compute**.

RESULTS

Cycles to Failure (ftg)

The plot showing cycles to failure (Figure 4) is created by default.